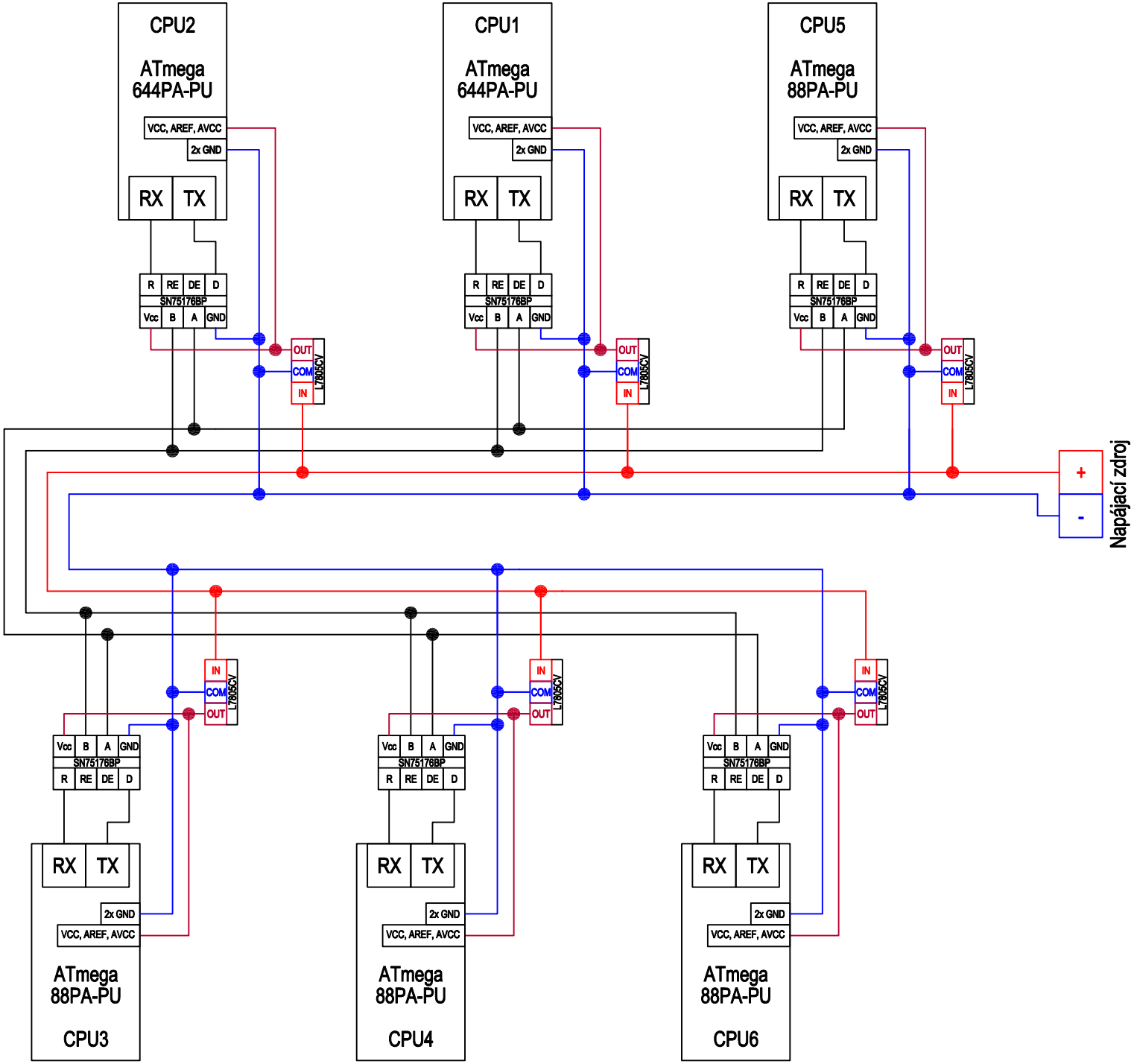
CPU2
ATmega
644PA-PU
VCC, AREF, AVCC
2x GND
RX
TX
CPU1
ATmega
644PA-PU
VCC, AREF, AVCC
2x GND
RX
TX
CPU5
ATmega
88PA-PU
VCC, AREF, AVCC
2x GND
RX
TX
R
RE
DE
D
SN75176BP
Vcc
B
A
GND
OUT
COM
IN
L7805CV
+
-
Napájací zdroj
IN
COM
OUT
L7805CV
Vcc
B
A
GND
SN75176BP
R
RE
DE
D
RX
TX
2x GND
VCC, AREF, AVCC
ATmega
88PA-PU
CPU3
CPU4
CPU6