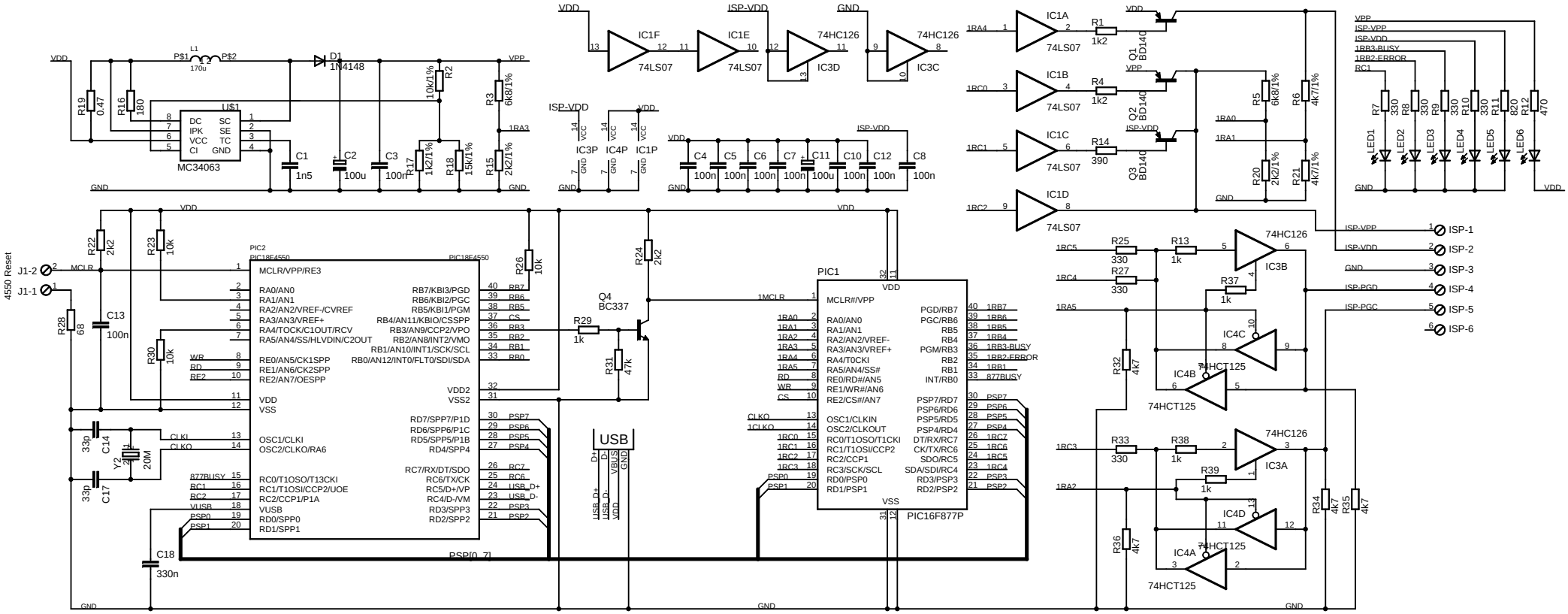
VDD
GND
VPP
ISP-VDD
L1
170u
P$1
P$2
D1
1N4148
R19
0.47
R16
180
U$1
MC34063
DC
IPK
VCC
CI
SC
SE
TC
GND
C1
1n5
C2
100u
C3
100n
R17
1k2/1%
R18
15k/1%
R15
2k2/1%
R2
10k/1%
R3
6k8/1%
1RA3
IC1F
74LS07
IC1E
74LS07
74HC126
IC3D
74HC126
IC3C
IC3P
IC4P
IC1P
C4
C5
C6
C7
C11
C10
C12
C8
100n
IC1A
IC1B
IC1C
IC1D
74LS07
R1
1k2
R4
1k2
R14
390
Q1
BD140
Q2
BD140
Q3
BD140
1RA4
1RC0
1RC1
1RC2
R5
6k8/1%
R6
4k7/1%
R20
2k2/1%
R21
4k7/1%
1RA0
1RA1
R7
330
R8
330
R9
330
R10
330
R11
820
R12
470
LED1
LED2
LED3
LED4
LED5
LED6
ISP-VPP
ISP-VDD
1RB3-BUSY
1RB2-ERROR
RC1
ISP-1
ISP-2
ISP-3
ISP-4
ISP-5
ISP-6
ISP-PGD
ISP-PGC
4550 Reset
J1-2
J1-1
MCLR
R22
2k2
R23
10k
R28
68
C13
100n
R30
10k
PIC2
PIC18F4550
MCLR/VPP/RE3
RA0/AN0
RA1/AN1
RA2/AN2/VREF-/CVREF
RA3/AN3/VREF+
RA4/TOCK/C1OUT/RCV
RA5/AN4/SS/HLVDIN/C2OUT
RE0/AN5/CK1SPP
RE1/AN6/CK2SPP
RE2/AN7/OESPP
VDD
VSS
OSC1/CLKI
OSC2/CLKO/RA6
RC0/T1OSO/T13CKI
RC1/T1OSI/CCP2/UOE
RC2/CCP1/P1A
VUSB
RD0/SPP0
RD1/SPP1
RB7/KBI3/PGD
RB6/KBI2/PGC
RB5/KBI1/PGM
RB4/AN11/KBIO/CSSPP
RB3/AN9/CCP2/VPO
RB2/AN8/INT2/VMO
RB1/AN10/INT1/SCK/SCL
RB0/AN12/INT0/FLT0/SDI/SDA
VDD2
VSS2
RD7/SPP7/P1D
RD6/SPP6/P1C
RD5/SPP5/P1B
RD4/SPP4
RC7/RX/DT/SDO
RC6/TX/CK
RC5/D+/VP
RC4/D-/VM
RD3/SPP3
RD2/SPP2
877BUSY
PSP[0..7]
33p
C14
Y2
20M
C17
C18
330n
R26
10k
R24
2k2
Q4
BC337
R29
1k
R31
47k
USB
D+
D-
VBUS
GND
USB_D+
USB_D-
PIC1
PIC16F877P
MCLR#/VPP
PGD/RB7
PGC/RB6
RB5
RB4
PGM/RB3
RB2
RB1
INT/RB0
PSP7/RD7
PSP6/RD6
PSP5/RD5
PSP4/RD4
DT/RX/RC7
CK/TX/RC6
SDO/RC5
SDA/SDI/RC4
RD3/PSP3
RD2/PSP2
RE0/RD#/AN5
RE1/WR#/AN6
RE2/CS#/AN7
OSC1/CLKIN
OSC2/CLKOUT
RC0/T1OSO/T1CKI
RC1/T1OSI/CCP2
RC2/CCP1
RC3/SCK/SCL
RD0/PSP0
RD1/PSP1
1MCLR
1RA0
1RA1
1RA2
1RA3
1RA4
1RA5
RD
WR
CS
CLKO
1CLKO
1RC0
1RC1
1RC2
1RC3
PSP0
PSP1
1RB3-BUSY
1RB2-ERROR
877BUSY
R25
330
R27
330
R13
1k
R37
1k
R32
4k7
IC3B
74HC126
IC4C
IC4B
74HCT125
R33
330
R38
1k
R39
1k
IC3A
74HC126
IC4D
IC4A
74HCT125
R36
4k7
R34
4k7
R35
4k7

Potyo 2006.08.30

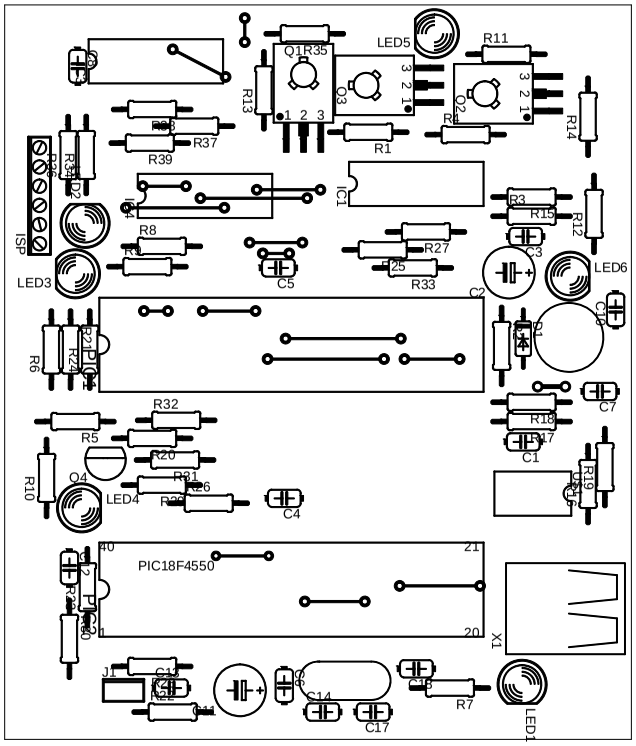
LED5
R11
Q1
R35
R13
Q3
Q2
R14
R9
R37
R39
R1
R2
IC1
IC4
R3
R15
R12
ISP
R8
R4
R27
C3
LED6
LED3
C5
R25
R33
C2
C6
R6
R21
R22
D1
R7
C7
R32
R5
R18
R17
C1
R20
R31
R26
R10
Q4
LED4
R28
C4
R19
U3
C15
PIC18F4550
40
21
1
20
X1
J1
C13
C12
C11
C14
C16
C17
R7
LED1

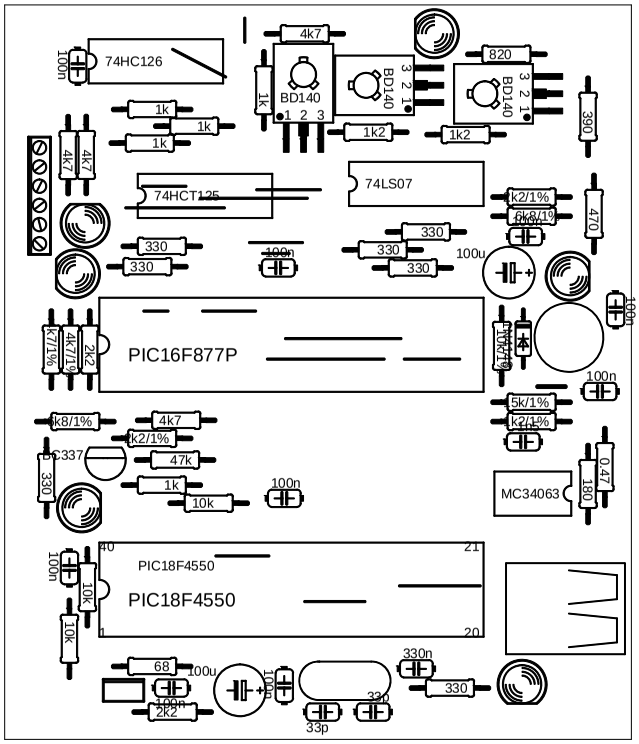
74HC126
100n
4k7
1k
BD140
1 2 3
BD140
3 2 1
820
BD140
3 2 1
390
1k
1k
1k
1k2
1k2
4k7
4k7
74HCT125
74LS07
k2/1%
6k8/1%
470
330
330
100n
330
330
100u
100n
PIC16F877P
k7/1%
4k7/1%
2k2
1N4148
100n
5k/1%
k2/1%
k8/1%
4k7
k2/1%
BC337
47k
330
1k
10k
100n
MC34063
0.47
180
PIC18F4550
PIC18F4550
100n
10k
10k
68
100u
100n
2k2
100u
330n
330
330
33p